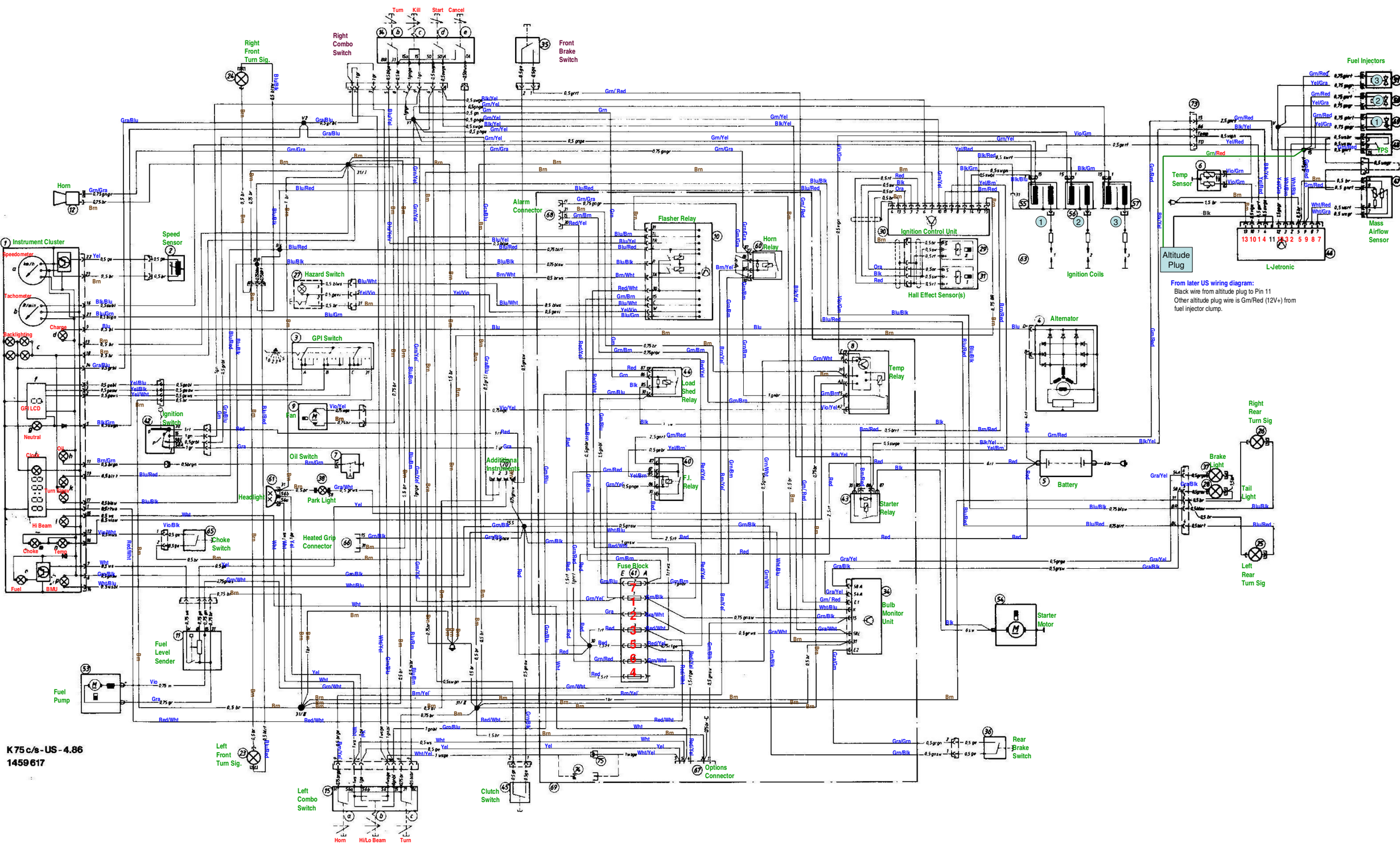
Right Front Turn Sig.
Right Combo Switch
Turn
Kill
Start
Cancel
Front Brake Switch
Fuel Injectors
Horn
Instrument Cluster
Speedometer
Tachometer
Backlighting
Charge
GPI LCD
Neutral
Choke
Oil
Turn Sigs
Hi Beam
Choke
Temp
Fuel
BMU
Speed Sensor
Hazard Switch
GPI Switch
Ignition Switch
Fan
Oil Switch
Headlight
Park Light
Choke Switch
Heated Grip Connector
Fuel Level Sender
Fuel Pump
Left Front Turn Sig.
Left Combo Switch
Horn
Hi/Lo Beam
Turn
Clutch Switch
Options Connector
Alarm Connector
Flasher Relay
Horn Relay
Load Shed Relay
Additional Instruments
F.I. Relay
Fuse Block
Ignition Control Unit
Hall Effect Sensor(s)
Ignition Coils
Temp Relay
Starter Relay
Bulb Monitor Unit
Alternator
Battery
Starter Motor
Rear Brake Switch
Temp Sensor
Altitude Plug
L-Jetronic
Mass Airflow Sensor
TPS
Right Rear Turn Sig
Brake Light
Tail Light
Left Rear Turn Sig
From later US wiring diagram:
Black wire from altitude plug to Pin 11
Other altitude plug wire is Gm/Red (12V+) from fuel injector clump.
K 75 c/s - US - 4.86
1459617